30 Ton Air Cooled Direct Expansion PCAir Unit

PCA45 Ton ACU

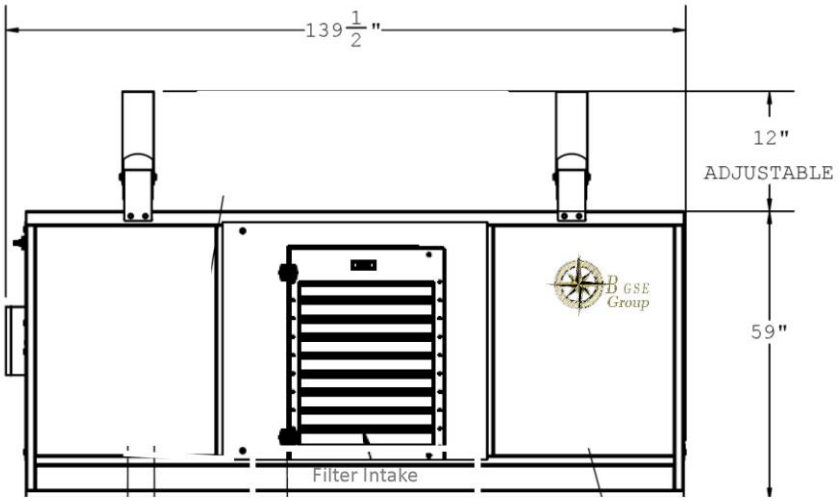

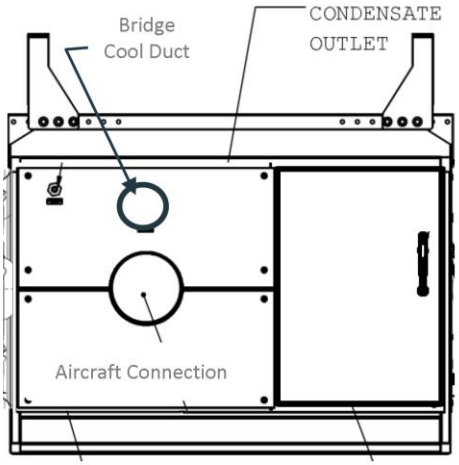

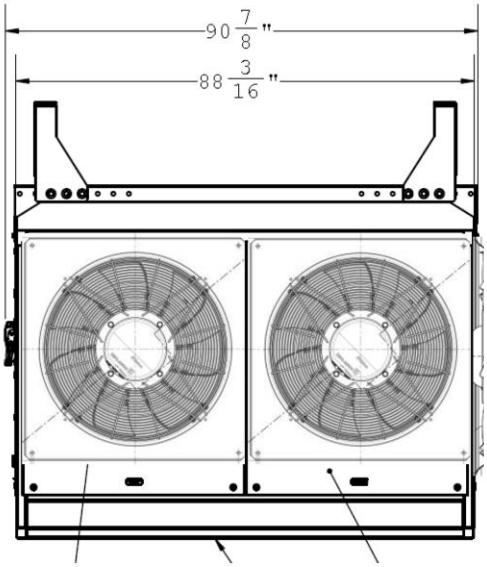

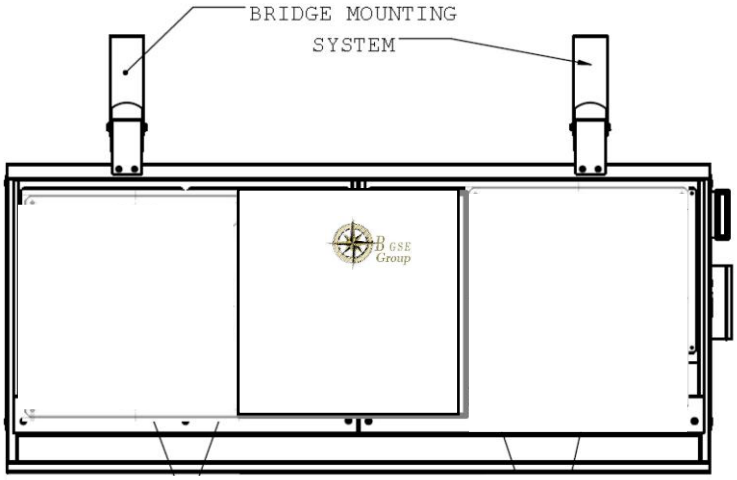

Exclusive Worldwide Distributor

BGSE GROUP LLC
14034 Clarendon Point Court
Huntersville, NC 28078
United States of America
Bryan Bullerdick
President
+1 (704) 488-0084
bryan@bgsegroup.com

30 Ton Direct Expansion Air Cooled PCAir Unit R3 042619

Electrical	
Rated @ 60 Hz @ design conditions	**30 Tons**
Heater (Optional)	36-54 kW
Unit Breaker	100 Amps per NEC 440.33
Voltage / Frequency	480 V / 3P / 60 Hz
RLA @ Ambient	89 Amps
Dimensions / Weight	
Length	135 in (5380 mm)
Width	88 in (2235 mm)
Height	61 in (1549 mm)
Weight	3,735 lbs. (1,694 kg)
Control System	Push Button Control
Blower Motor	20 BHP
Mass Airflow Variable	180 ppm @ 24 in WG
Mass Airflow Variable	1.36 Kg/Sec@7.5 KPa
Volumetric Airflow	2,400 CFM 4077 CuM/H
Discharge Air (Variable)	40°F to 24°F (+4.4°C to -7.2°C)
Defrost interval	20-90 Min
Condenser Fans	2
Power	5 BHP
Diameter	36 in (905 mm)
Compressors	2
Nominal RT Capacity	15 Tons Each
Refrigerant	410A
Sound Level	85 dBA @ 15 Ft.

Ratings:

Field Labeling Process by ETL to UL-1995

AHRI-410

Meets Airbus Compliance Document for Suppliers X21RP1146224_v7

Boeing Aircraft Maintenance Manuals (AMM) and Facility Planning Guides

IATA AHM 974 and IATA AHM 997

Condenser Coils	
Rows per Unit	4
Tube Material	Copper
Fin Material	Aluminum
Fin Style	Enhanced
Protection	Optional Phenolic
Coil Area / stage	12 Sq. Ft
Evaporator Coils	4
Tube Material	Copper
Fin Material	Aluminum
Fin Style	ARI-410
Protection	Enhanced flush
Coil Area / stage	10.9 Sq. Ft
Design Ambient	
Dry Bulb	95°F (35.0°C)
Wet Bulb	78.0°F (25.6°C)
Environment	0%-100% RH
Temp. Extremes	-40°F to +125°F

NOTE: *Special features and options included to meet specification requirements*

NOTE: *Specifications subject to change without notice*

Optional Features

- *Optional PLC Manufacturers*
- *Apron Management System (AMS) Interface (Ethernet or Modbus)*
- *Single or Dual Hose Outlets + Bridge Cool*
- *VFD Drives on Blower / Condenser Fan Motors*
- *Heating*
- *Aircraft Cabin or Bridge Temperature Probe*
- *Boarding Bridge Cooling and Heating Capability and Controls*
- *Hose Storage and Retrieval Systems*
- *Delivery Hose (style and / or length) and Aircraft Couplings*

Configuration to service a variety of aircraft LCD Operator Interface Terminal

Northern-Air Systems

MADE IN USA

3605 BUFFALO RD
ROCHESTER, NY 14624
United States of America
Phone: +1-585-594-5050
Fax: +1-585-594-8888
24 Hours Toll Free: +1-888-723-9230
ISO 9001 Certified
www.northernairsystems.com

Exclusive Worldwide Distributor

B GSE Group

BGSE GROUP LLC
14034 Clarendon Point Court
Huntersville, NC 28078
United States of America
Bryan Bullerdick
President
+1 (704) 488-0084
bryan@bgsegroup.com

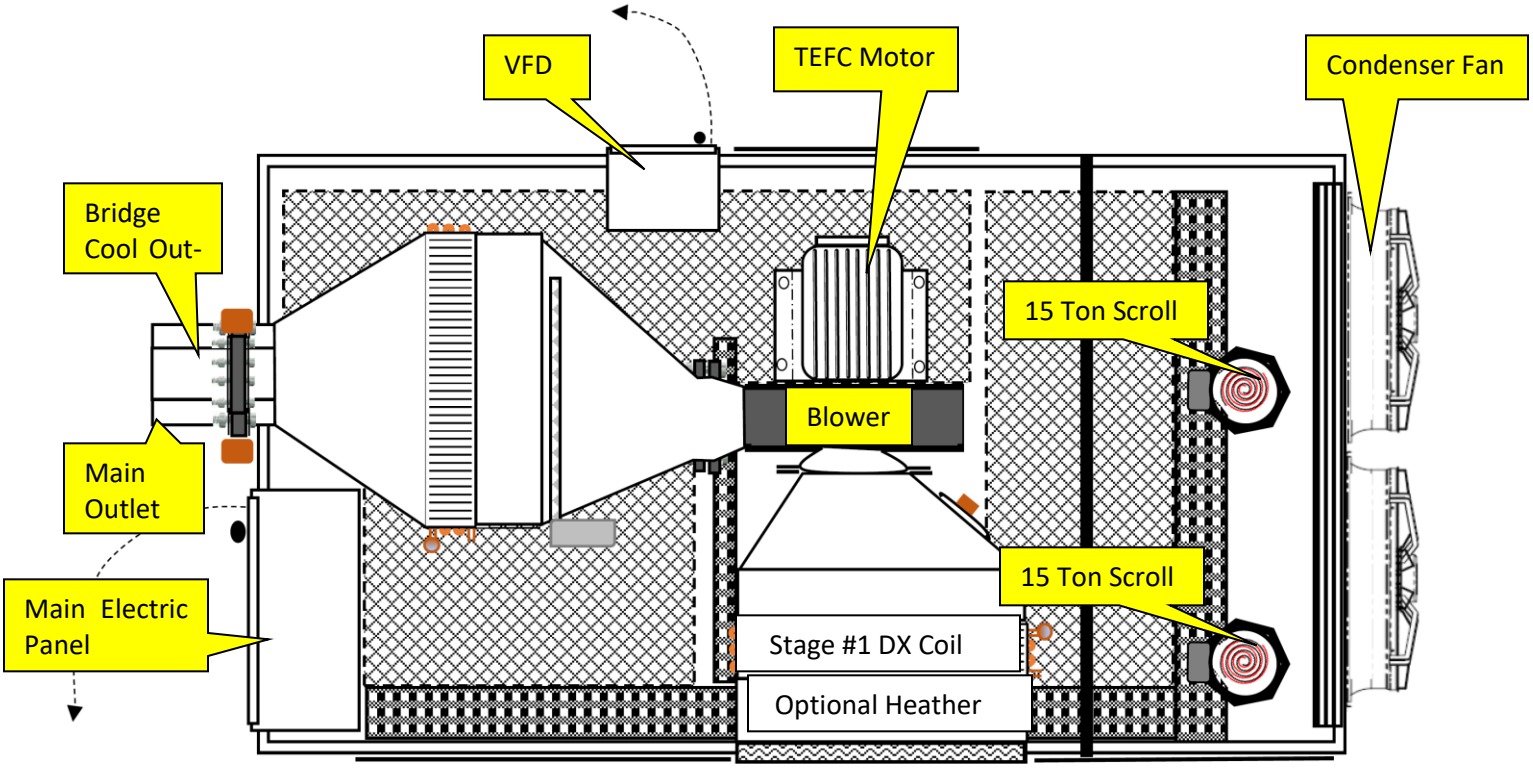

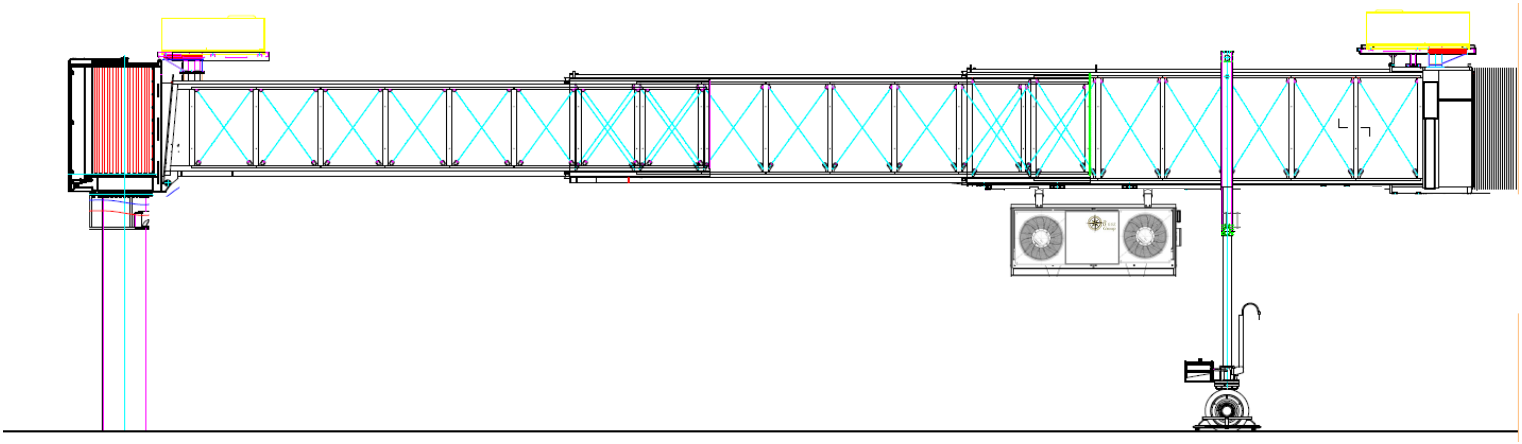

Northern-Air Systems

MADE IN USA

3605 BUFFALO RD
ROCHESTER, NY 14624
United States of America
Phone: +1-585-594-5050
Fax: +1-585-594-8888
24 Hours Toll Free: +1-888-723-9230
ISO 9001 Certified
www.northernairsystems.com

ISO 9001

Exclusive Worldwide Distributor

BGSE GROUP LLC
14034 Clarendon Point Court
Huntersville, NC 28078
United States of America
Bryan Bullerdick
President
+1 (704) 488-0084
bryan@bgsegroup.com